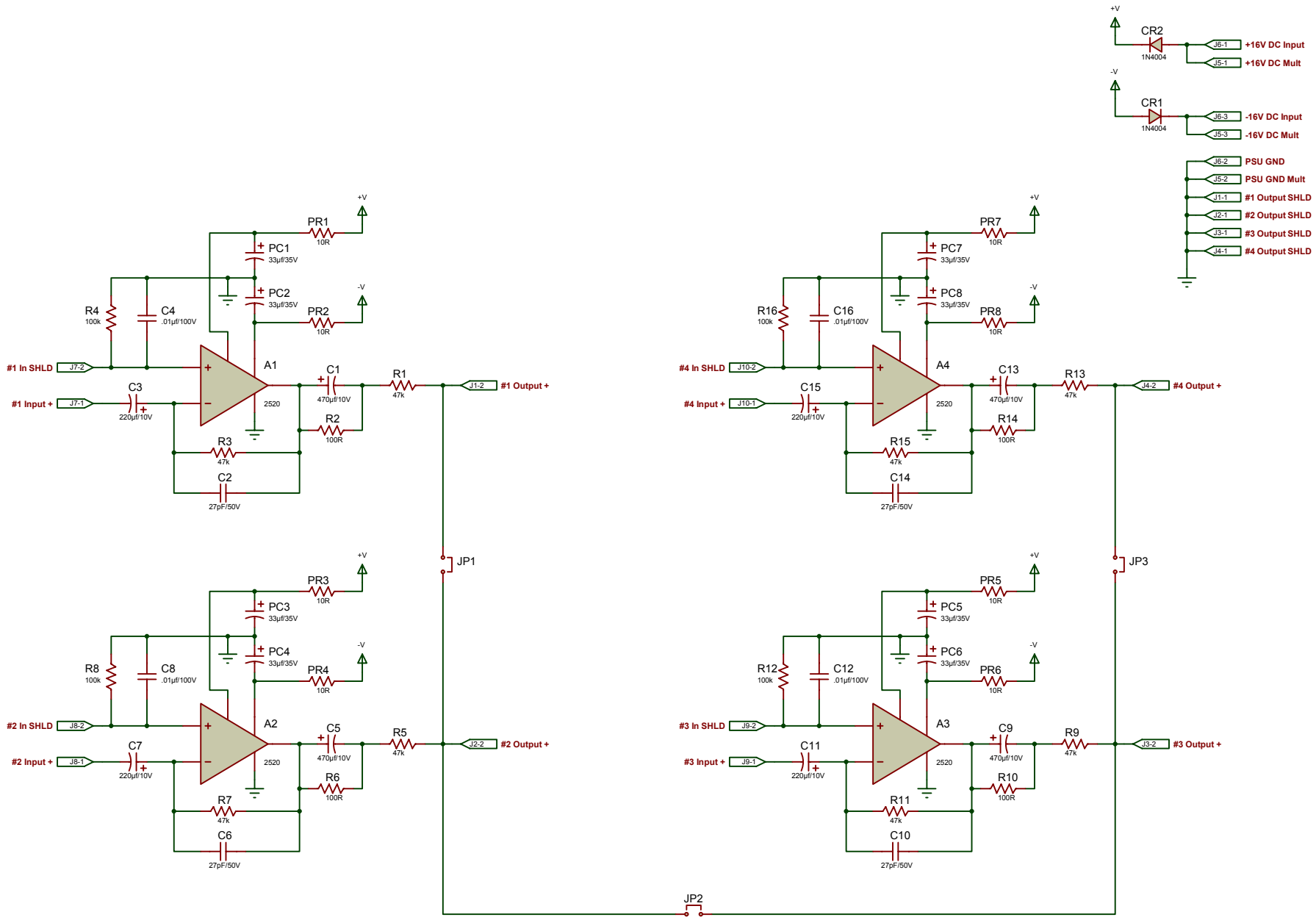

DESIGN TITLE: CAPI Inv-ACA	DATE: 9/20/2015	CAPI capi-gear.com
REV: B	PAGE: 1 of 1	Classic Audio Products of IL
BY:		