GAR1731

ASSEMBLY MANUAL

1731 Q2V3

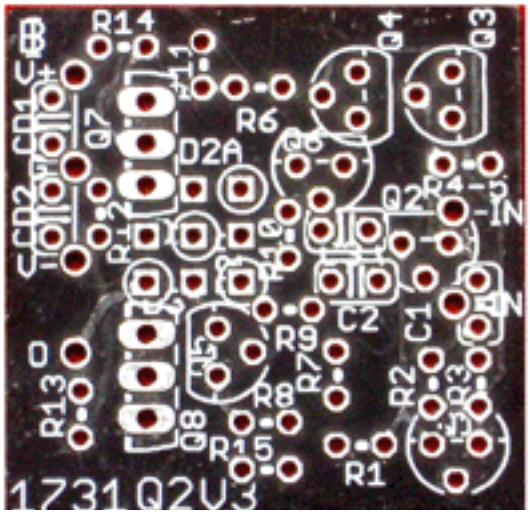

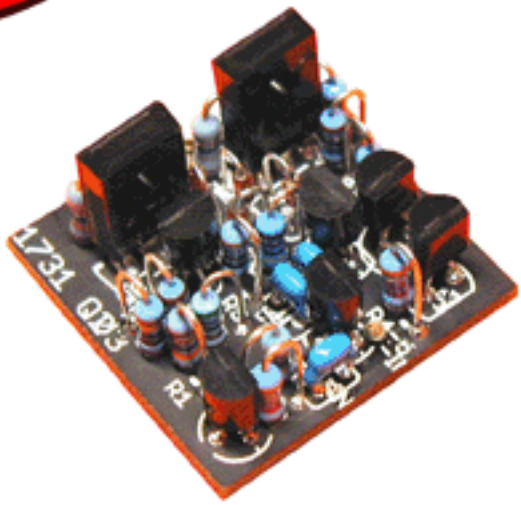

© 2015 BARNETT IND.

Recommended Tools for Assembly:

Small conical tip iron... the smaller the better.
Recommended... Hakko FX 888-D
https://www.hakko.com/english/products/hakko_fx888d.html

For best results use Kester 44 63/37 .031 or small solder.

A Panavise or small bench vice for holding the PCB while soldering.

A magnifying light.

A sharp pair of small dykes. Recommended....CHP170
http://www.all-spec.com/products/CHP-170.html

WARNING: WARE EYE PROTECTION WHEN CLIPING WIRE ENDS !!

Solder wick or Soldapullt or
Recommended.. The Hakko 808 or FR300 Desoldering Station Once you try one you will never go back to wick etc.

VOM Meter for checking Resistor values

A small screwdiver shaft or meter probe
For bending Resistor and Diode leads

© 2015 BARNETT IND

GAR1731 ASSEMBLY MANUAL

Recommended Stuffing Order:

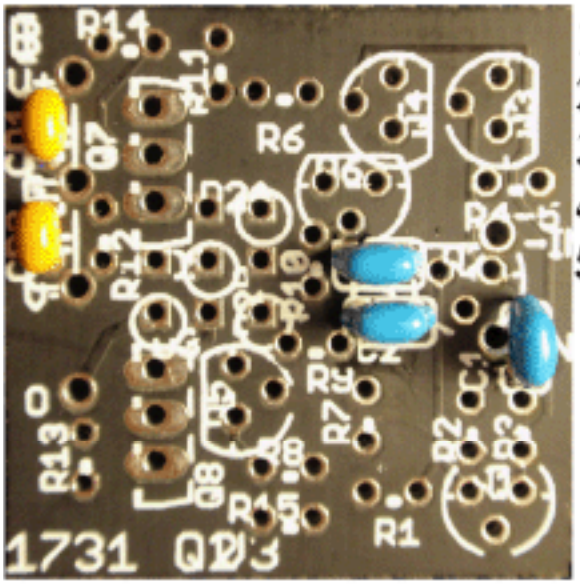

1) CD1 .1uf yellow cap
2) CD2 .1uf yellow cap
3) C1 680pf blue cap marked 681J
4) C2 10pf blue cap marked 10D
5) C3 10pf blue cap marked 10D

See page 3 for placement

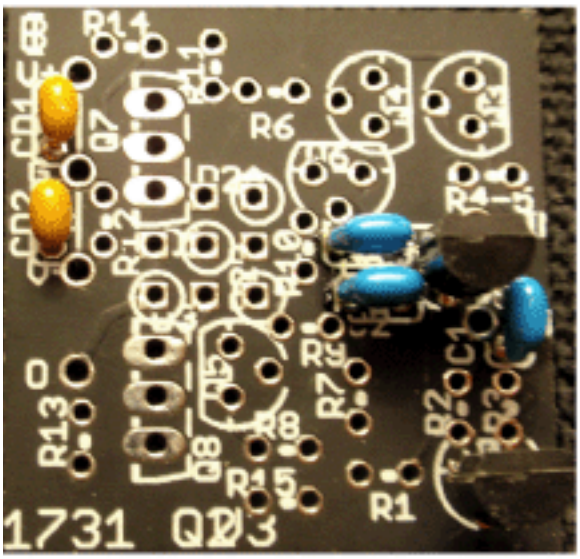

6) Q1
7) Q2

Matched pair of BC550c

Note: The 2 transistors from the Little bag with the Millmax pins

See page 4 for placement

©2015 BARNETT IND.

GAR1731 ASSEMBLY MANUAL

CAP PLACEMENT

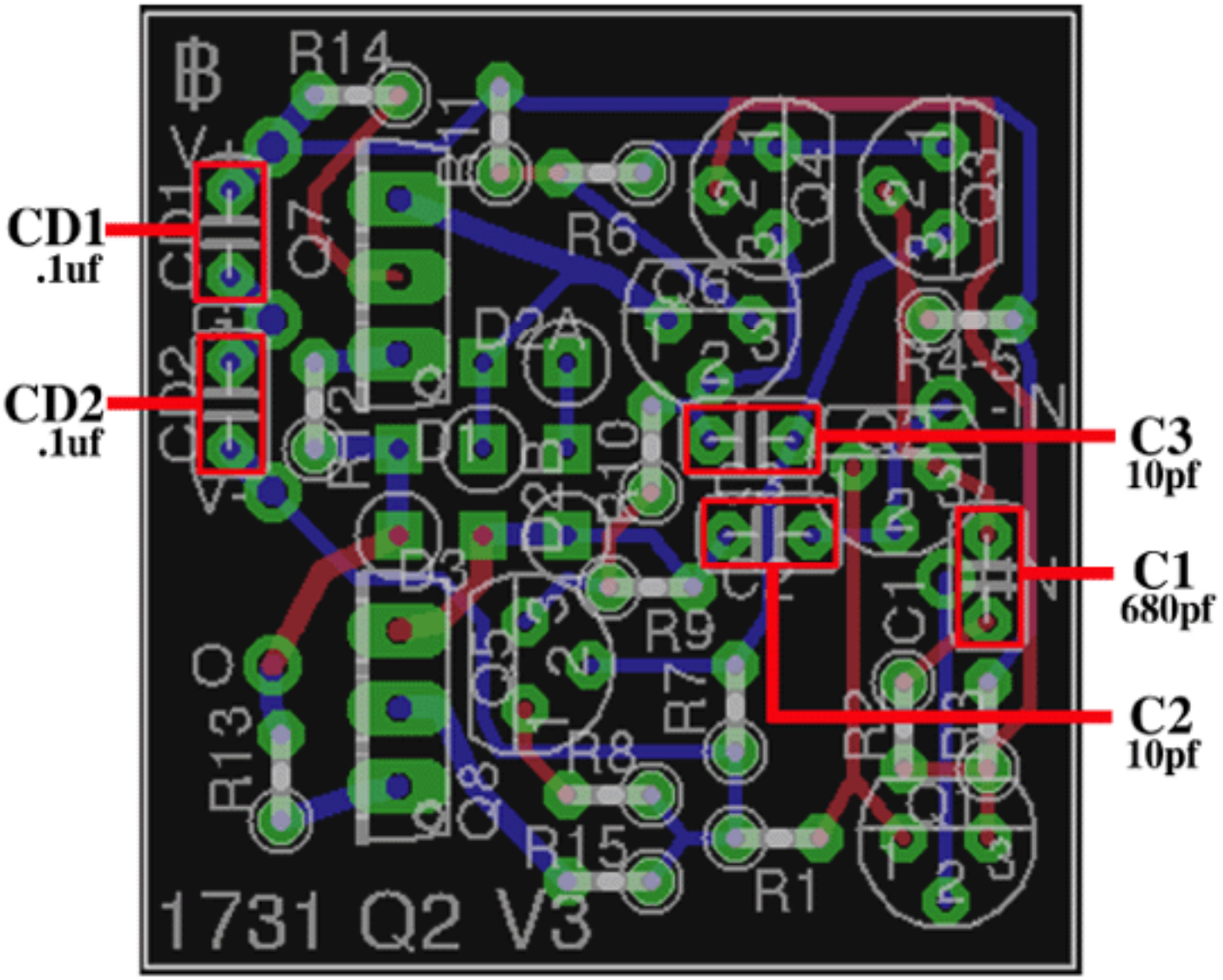

©2015 BARNETT IND.

TRANSISTOR PLACEMENT

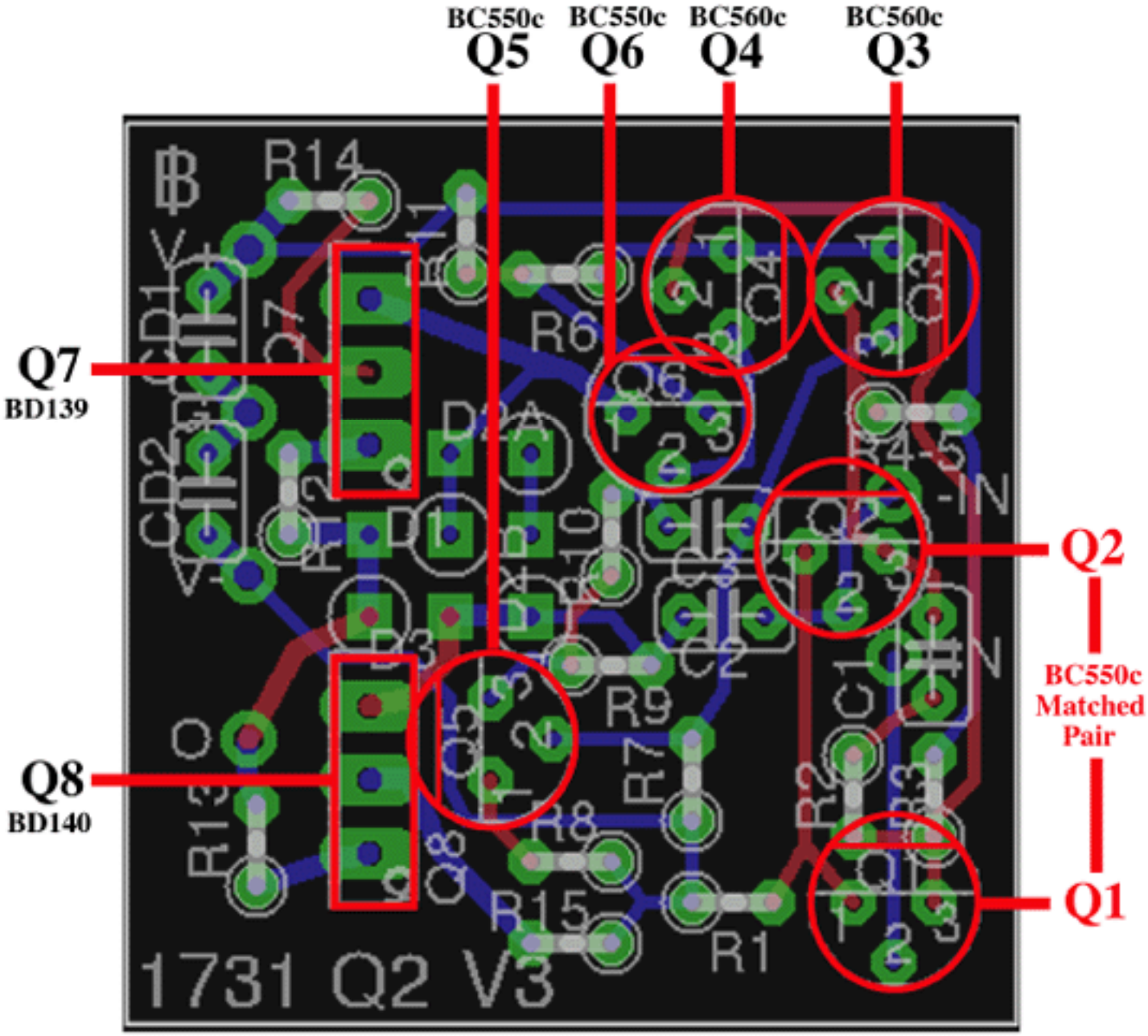

©2015 BARNETT IND.

GAR1731 ASSEMBLY MANUAL

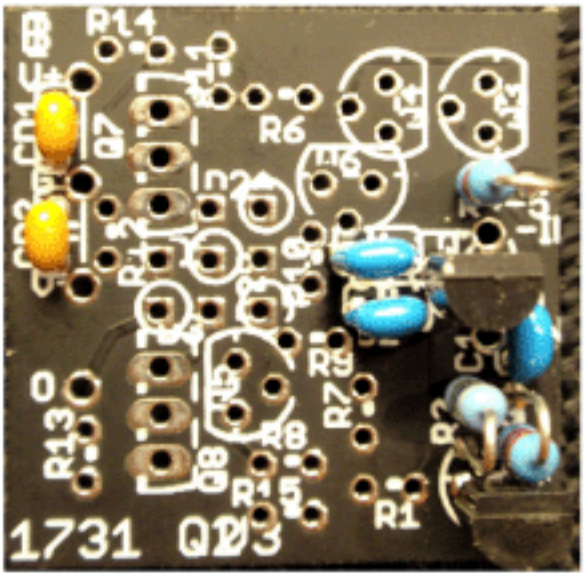

8) R2 91 ohm resistor
9) R3 39k2 ohm resistor
10) R4-5 39k2 ohm resistor

Note: R4-5 is only 1 resistor

See page 6 for placement

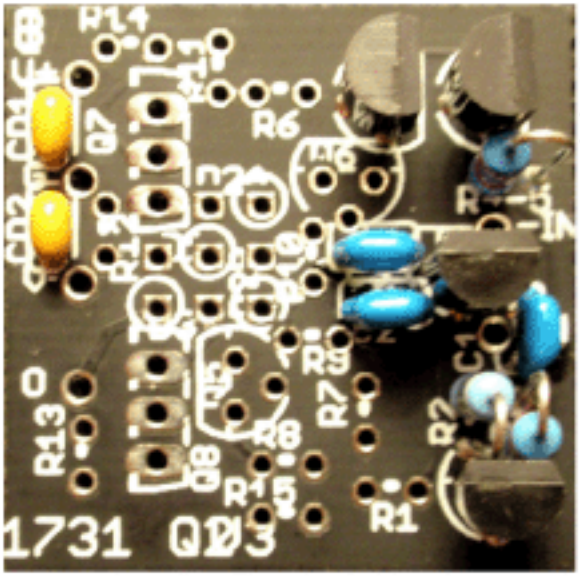

11) Q3 BC560c transistor
12) Q4 BC560c transistor

See page 4 for placement

©2015 BARNETT IND

GAR1731 ASSEMBLY MANUAL

RESISTOR PLACEMENT

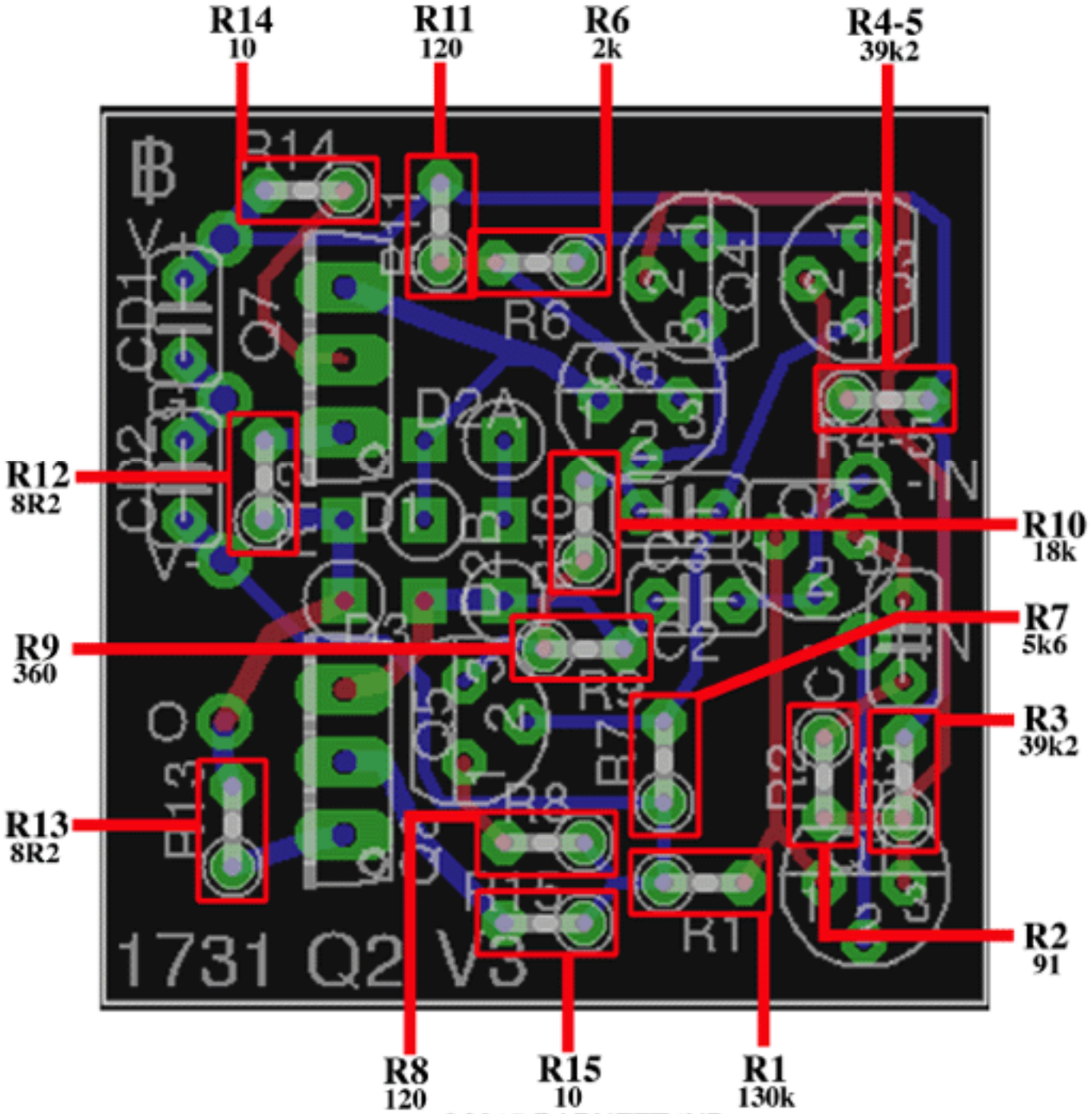

©2015 BARNETT IND.

GAR1731 ASSEMBLY MANUAL

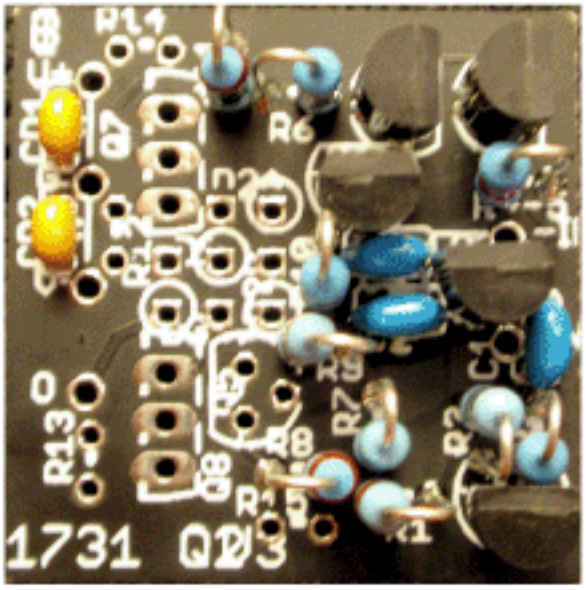

13) R10 18K ohm resistor
14) R9 360 ohm resistor
15) R7 5k6 ohm resistor
16) R1 130k ohm resistor
17) R6 2k ohm resistor
18) R11 120 ohm resistor
19) R8 120 ohm resistor

See page 6 for placement

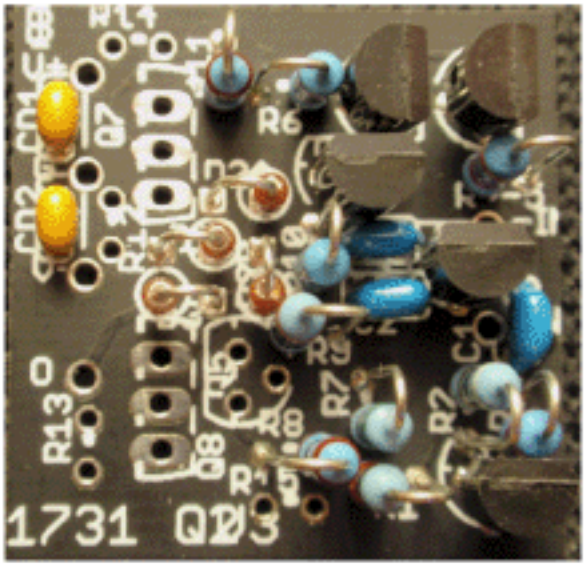

20) D2B
21) D2A
22) D1
23) D3

Note: All Diodes are 1N4148

See page 8 for placement

Note: The circle in the silk screen is for the black band on the Diode >

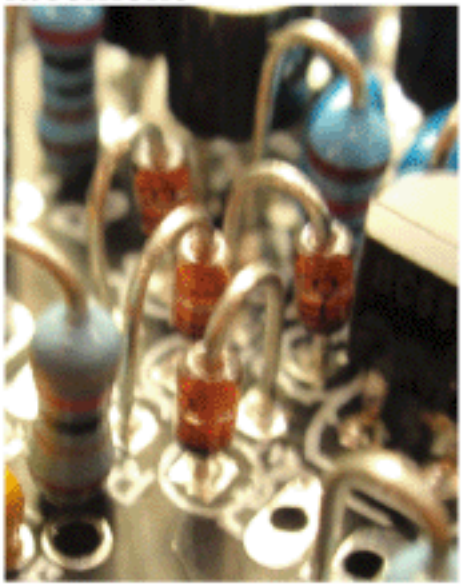

©2015 BARNETT IND.

DIODE PLACEMENT

Note: The circle in the silk srceen is for the black band on the Diode.

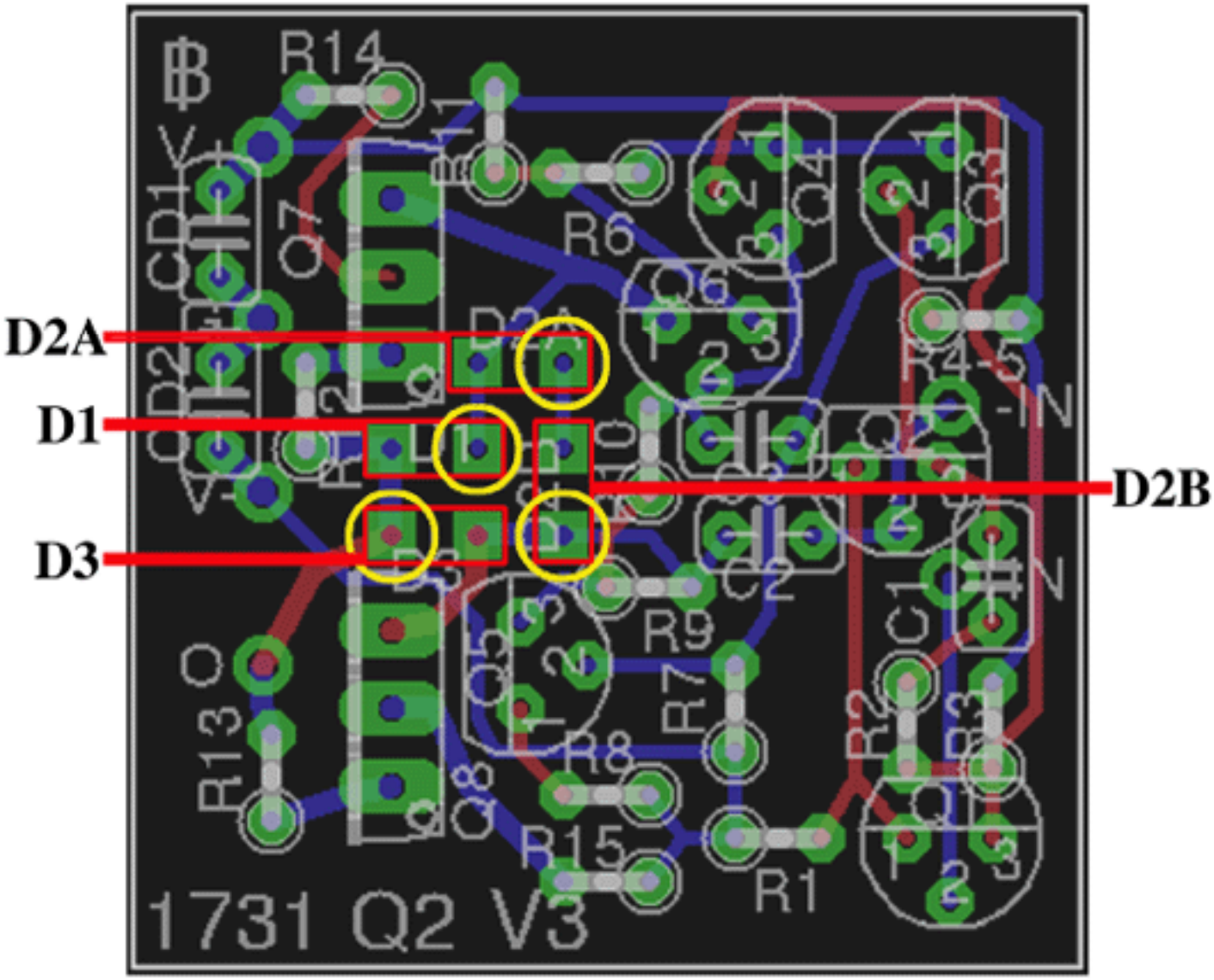

Note: The circle in the silk srceen is for the black band on the Diode.

©2015 BARNETT IND.

GAR1731 ASSEMBLY MANUAL

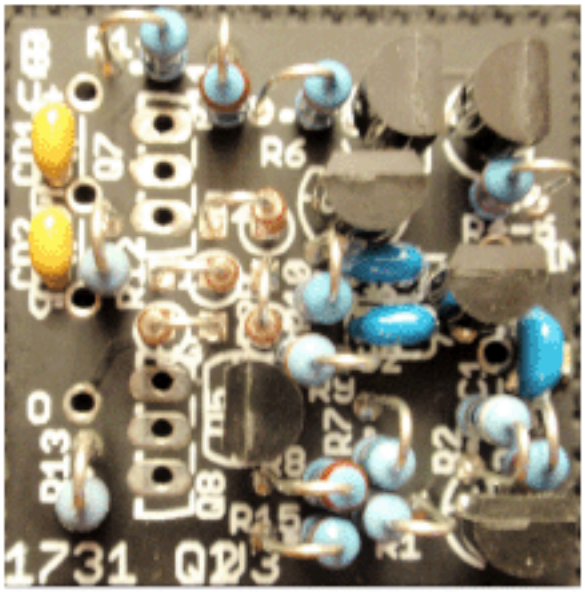

24) Q5, Q6 BC550C Transistors
25) R15 10 ohm resistor
26) R14 10 ohm resistor
27) R12 8R2 ohm resistor
28) R13 8R2 ohm resistor

See pages 4 and 6 for placement.

NOTE: R12 & R13 are the larger tan colored resistors

Flip the PCB over... Its Millmax Time !

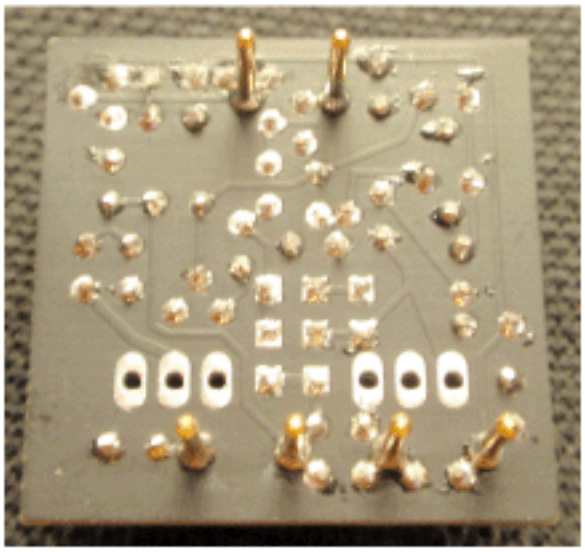

29 thru 34) Solder in the 6 Millmax Pins.

See page 10 for placement

Proceed to page 11 and perform shorts test.

©2015 BARNETT IND.

MILLMAX PIN PLACEMENT

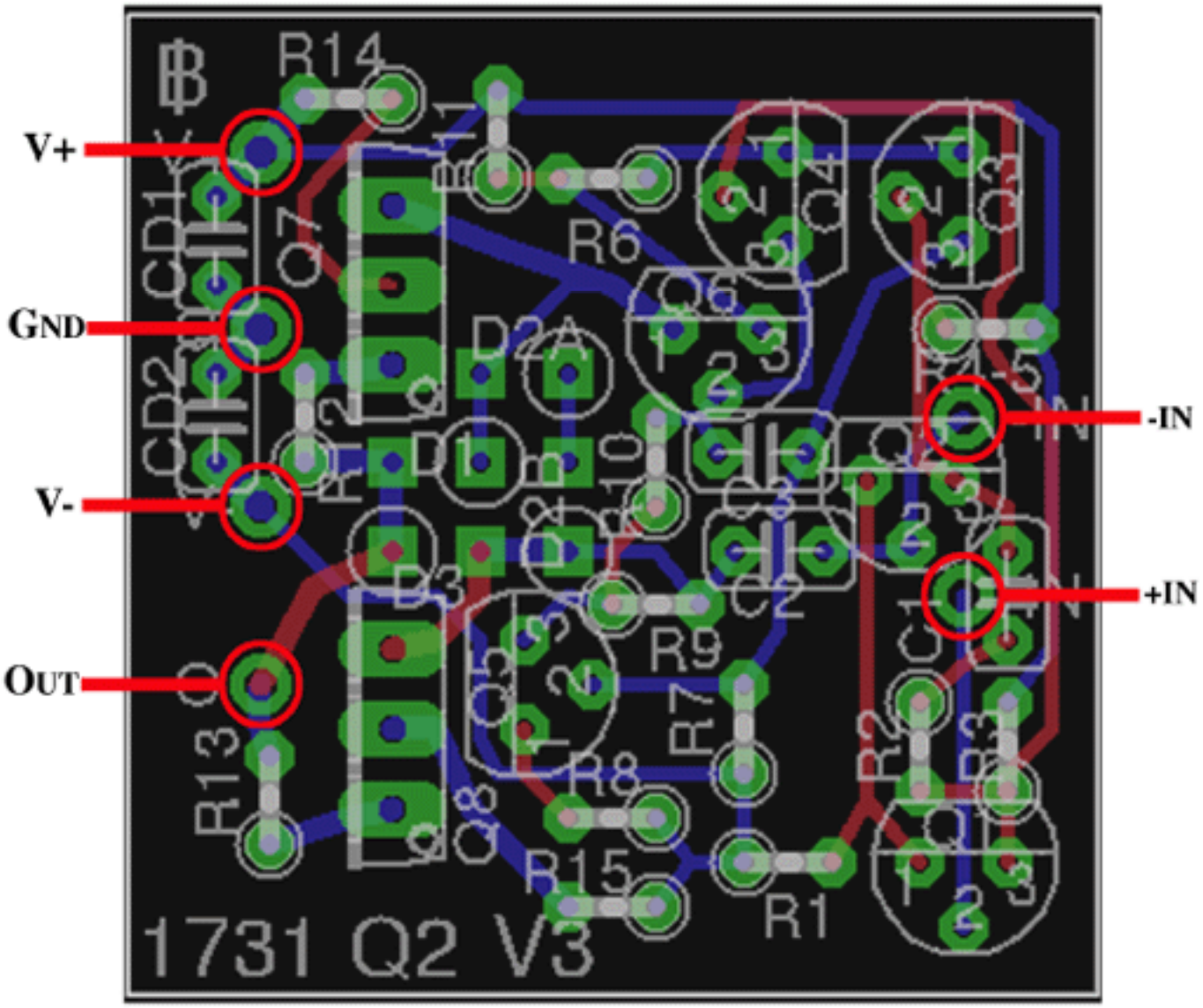

©2015 BARNETT IND.

GAR1731 ASSEMBLY MANUAL

CHECK FOR SHORTS

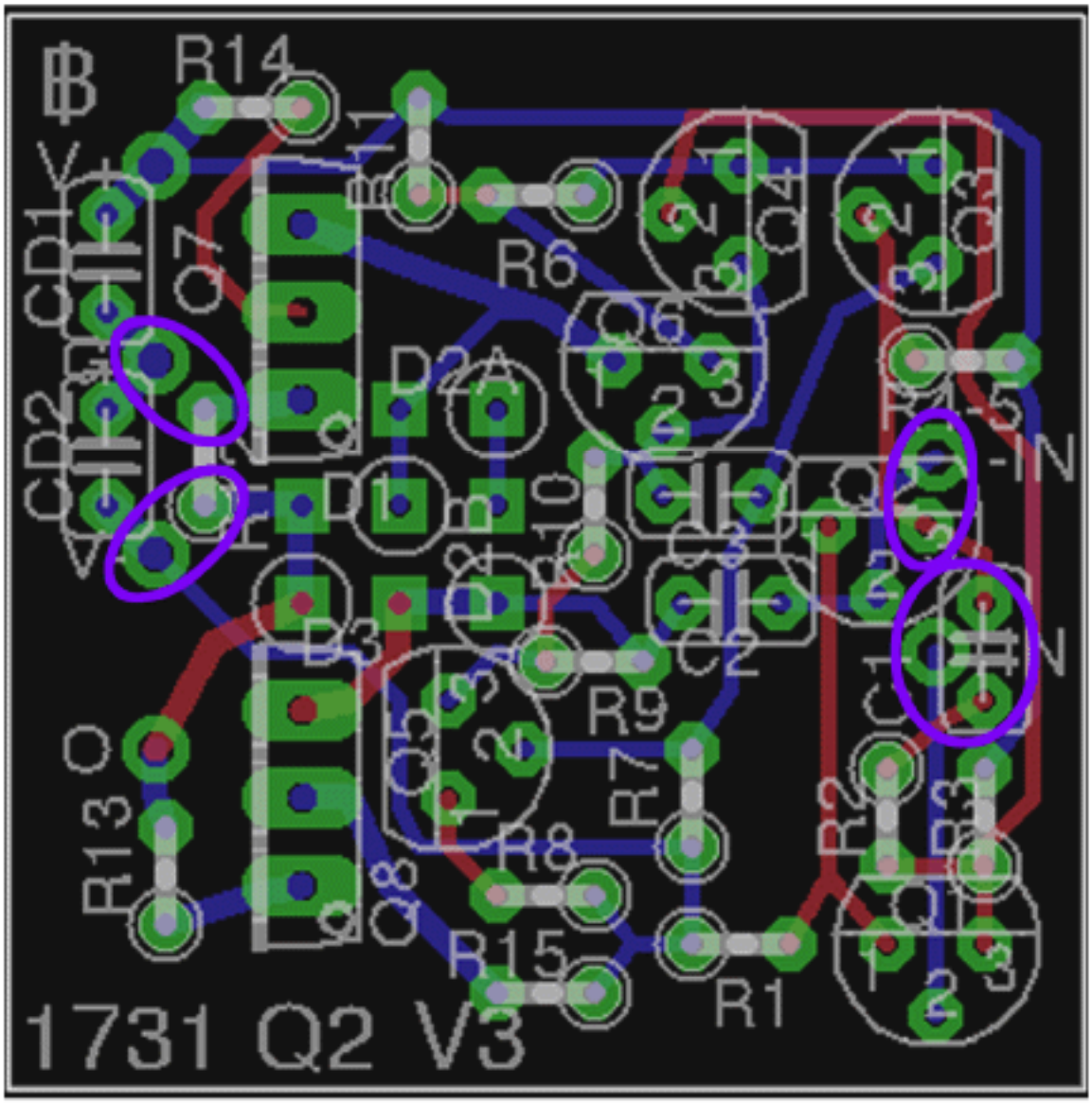

After Millmax Pin Installation *CHECK* with a multimeter that there are *NO* shorts between pads under the purple circles .

©2015 BARNETT IND.

GAR1731 ASSEMBLY MANUAL

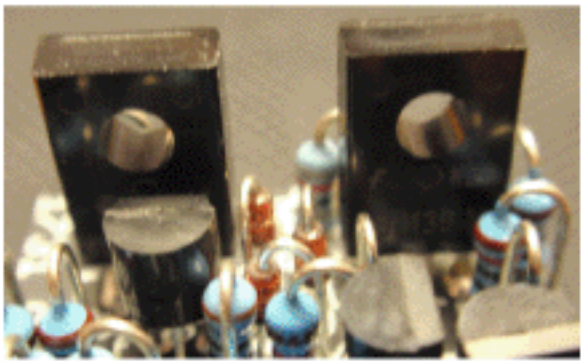

35) Q7 BD139 power transistor

36) Q8 BD140 power transistor

See Page 4 for placement

Note: The printing on these transistors are facing toward the camera in this picture. Q7 the BD139 is on the RIGHT.

This Completes Assembly

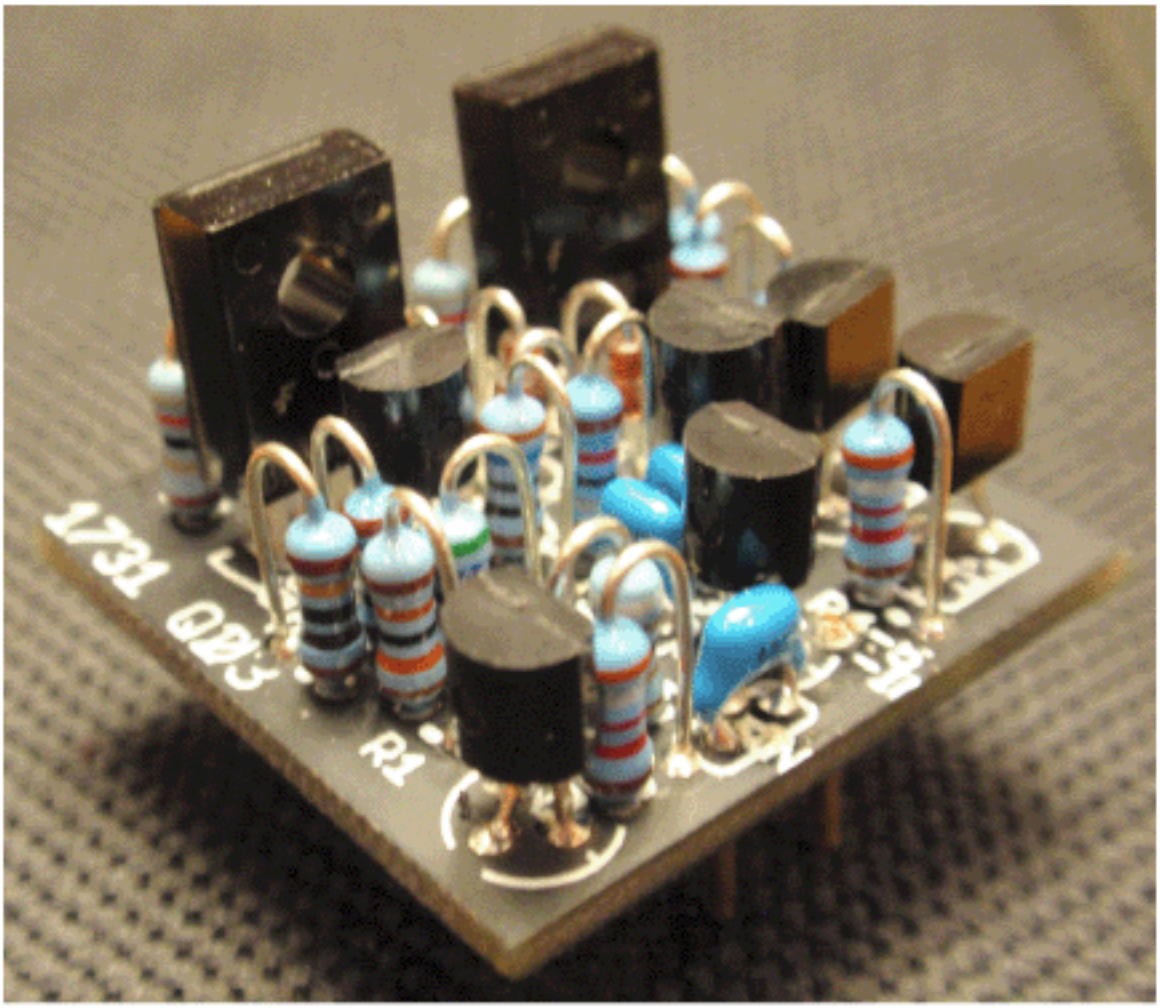

©2015 BARNETT IND.

gar1731 BOM

Part #	*Value*	*Mouser Part #*	*Manufacturer*	*Discription/Info*
RESISTORS				
R1	130k	271-130k-RC	Xicon	1/4W 1% Metal Film
R2	91R	271-91-RC	Xicon	1/4W 1% Metal Film
R3	39.2k	271-39.2k-RC	Xicon	1/4W 1% Metal Film
R4-5	39.2k	271-39.2k-RC	Xicon	1/4W 1% Metal Film
R6	2k	271-2k-RC	Xicon	1/4W 1% Metal Film
R7	5.6k	271-5.6k-RC	Xicon	1/4W 1% Metal Film
R8	120R	271-120-RC	Xicon	1/4W 1% Metal Film
R11	120R	271-120-RC	Xicon	1/4W 1% Metal Film
R9	360R	271-360R-RC	Xicon	1/4W 1% Metal Film
R10	18k	271-18k-RC	Xicon	1/4W 1% Metal Film
R12	8.2R	293-8.2-RC	Xicon	1/2W 5% Carbon Film
R13	8.2R	293-8.2-RC	Xicon	1/2W 5% Carbon Film
R14	10R	271-10-RC	Xicon	1/4W 1% Metal Film
R15	10R	271-10-RC	Xicon	1/4W 1% Metal Film
CAPACITORS				
C1	680p	RCS5C1H681J0A2H03B	Murata	50volts C0G 5% Marked J681
C2	10p	RCE5C1H100J0A2H03B	Murata	50volts C0G 5% Marked J10
C3	10p	RCE5C1H100J0A2H03B	Murata	50volts C0G 5% Marked J10
CD1	.1uf	594-K104K15X7RF5TL2	Vishay	50V CERAMIC X7R 10% Yellow
CD2	.1uf	594-K104K15X7RF5TL2	Vishay	50V CERAMIC X7R 10% Yellow
DIODES				
D1A	1N4148	78-1N4148	Vishay	Small Signal Diode
D1B	1N4148	78-1N4148	Vishay	Small Signal Diode
D2	1N4148	78-1N4148	Vishay	Small Signal Diode
D3	1N4148	78-1N4148	Vishay	Small Signal Diode

© 2015 BARNETT IND

gar1731 BOM

TRANSISTORS					
Q1	BC550C	512-BC550CBU		Fairchild	Q1-Q2 hFE Match NPN TO92 Case
Q2	BC550C	512-BC550CBU		Fairchild	Q1-Q2 hFE Match NPN TO92 Case
Q3	BC560C	512-BC560CTA (TAPE)		Fairchild	PNP TO92 Case
Q4	BC560C	512-BC560CTA (TAPE)		Fairchild	PNP TO92 Case
Q5	BC550C	512-BC550CBU (BULK)		Fairchild	NPN TO92 Case
Q6	BC550C	512-BC550CBU (BULK)		Fairchild	NPN TO92 Case
Q7	BD13916	512-BD13916S	(or STU)	Fairchild	NPN TO126 Case
Q6	BD14016	512-BD14016S	(or STU)	Fairchild	PNP TO126 Case

MISC			
Pins	575-310320	MillMax	PC PIN.040 DIA 3103-2

© 2015 BARNETT IND

Disclaimer time....

USE COMMON SENSE WHEN USING TOOLS !

If you burn yourself, burn down your house when soldering or put your eye out clipping wire ends... DON'T COME TO US !!

YOU HAVE BEEN DULY WARNED !!

This assembly manual, including but not limited to all text, photographs and diagrams, is The intellectual property of Barnett Ind. Reproduction or re-publication by any means What so ever, whether electronic, mechanical or electromechanical, is strictly prohibited under International Copyright laws. The sole purpose for this document is to aid in the Assembly of the gar1731 Discrete Op-amp offered by Barnett Ind and sold exclusively By Classic Audio Products of IL. Commercial use is prohibited. Logos are Trade Marks of their respective companys. Classic Audio Products of IL. has no affiliation with Automated Processes Incorporated.